NOTES:

1. Installations depicted satisfy the requirements of the Florida Building Code, Building 8th Edition (2023) for design wind pressures and overall sizes noted.
2. Wood bucks, wood framing, steel stud framing, concrete and concrete masonry are by others and shall be designed by the architect or engineer of record to resist the loads imparted to them.
3. Wood buck strips and wood frames are assumed S–P–F (G=0.42) or denser. Buck width shall be greater than the window frame width. Tapered or partial width buck strips are not allowed.
4. Concrete masonry installations are assumed at least ASTM C90 normal weight hollow masonry units with a 1–1/4" wall thickness or normal weight concrete with a minimum compressive strength of f'c = 3,000 psi.
5. Metal stud frames are assumed to be a minimum 18 gauge 33 KSI steel.
6. Wood screws shall be corrosion resistant and meet the requirements of ANSI/ASME B18.6.1
7. Tapcon masonry anchors shall have a minimum embedment of 1–1/2" or full penetration of concrete masonry unit shell. They shall also have a minimum of 2" edge distance. Install concrete masonry anchors per manufacturer's installation instructions.
8. TEKS screws shall be corrosion resistant and shall be ASTM A510 Grade 1018 or equivalent.
9. Maximum permitted shim thickness is 1/4". Shims shall be non–compressible and load bearing type. Every through–frame fastener shall have a shim.
10. Products are non–impact resistant and will require approved protection devices if used in wind–borne debris regions.
11. Not for use in High Velocity Hurricane Zone (HVHZ).

CONTENTS:

Sheet	1	Notes
Sheet	2	Elevations
Sheet	3	Fin Install to Wood
Sheet	4	Fin Install to Steel Stud
Sheet	5	Frame Install to Wood
Sheet	6	Frame Install to Steel Stud
Sheets	7–8	Frame Install to Concrete or CMU
Sheets	9–10	J–Hook Installation Details

This item has been digitally signed and sealed by Michael D. Stremmel, PE on the date adjacent to the seal. Printed copies of this document are not considered signed and sealed and the signature must be verified on any electronic copies.

Michael D. Stremmel, PE
FL PE 65868
FL REG 37122
1410 Eden Road
York, PA 17402
717-916-6300

MICHAEL D. STREMMEL
LICENSE
No. 65868
STATE OF FLORIDA
PROFESSIONAL ENGINEER

2024.09.25 06:36:35 -04'00'

1650i PVC DH Window - Non-Impact
Notes

MI Windows and Doors
702 W. Market St.
Gratz, PA 17030

Drawing No.: 27250.01 - 1001
Project No.: 27250.01-107-16
Drawn By: MDS REV: 3 Date: 09/25/24

Scale: NTS

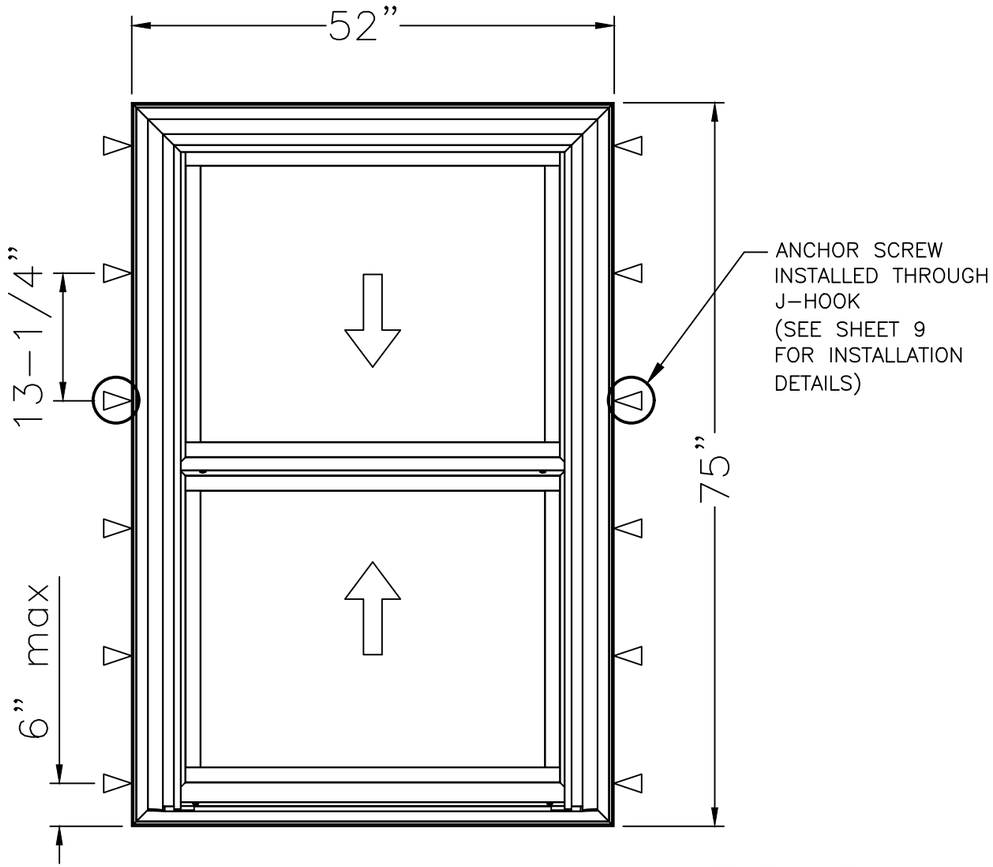

1650i PVC DH WINDOW – FINLESS INSTALLATION
MAXIMUM SIZE 52” X 75”
DESIGN PRESSURE +/– 50 PSF
NON–IMPACT

▽ FRAME ANCHOR
SEE SHEETS 5 TO 8

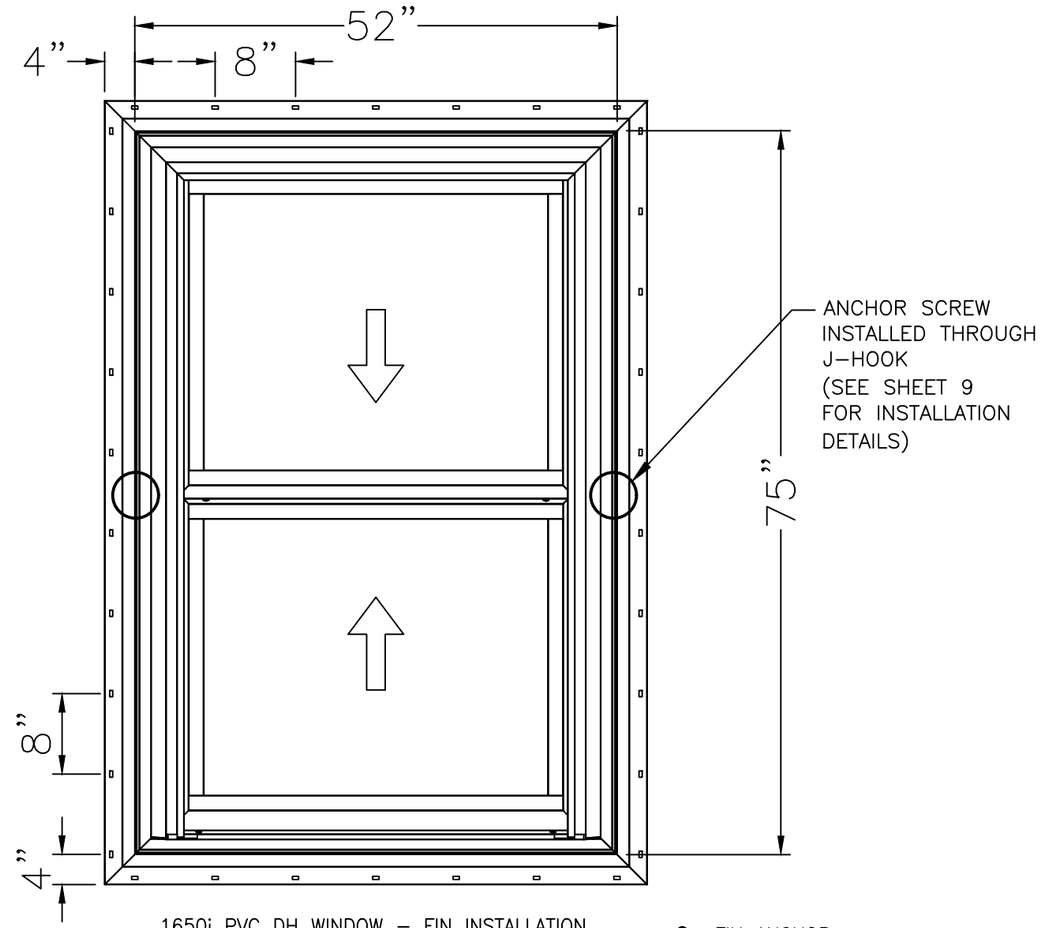

1650i PVC DH WINDOW – FIN INSTALLATION
MAXIMUM SIZE 52” X 75”
DESIGN PRESSURE +/– 50 PSF
NON–IMPACT

● FIN ANCHOR
SEE SHEETS 3 TO 4

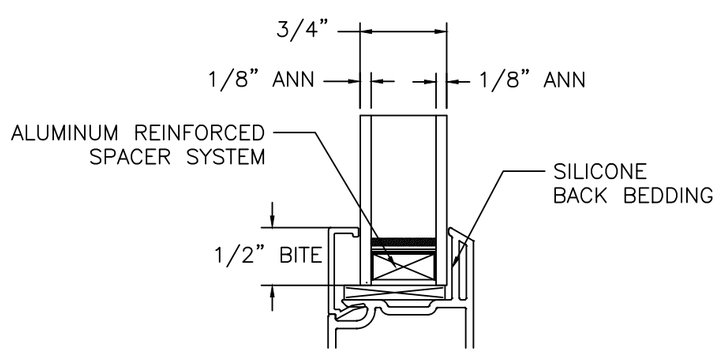

GLAZING DETAIL

This item has been digitally signed and sealed by Michael D. Stremmel, PE on the date adjacent to the seal. Printed copies of this document are not considered signed and sealed and the signature must be verified on any electronic copies.

Michael D. Stremmel, PE
FL PE 65868
FL REG 37122
1410 Eden Road
York, PA 17402
717-916-6300

MICHAEL D. STREMMEL
LICENSE
No. 65868
STATE OF FLORIDA
PROFESSIONAL ENGINEER

2024.09.25 06:36:35 -04'00'

1650i PVC DH Window - Non-Impact
Elevations

MI Windows and Doors
702 W. Market St.
Gratz, PA 17030

Drawing No.: 27250.01 - 1001
Project No.: 27250.01-107-16
Drawn By: MDS REV: 3 Date: 09/25/24

Scale: NTS

Note:
Waterproofing and interior finishes by others. Not shown for clarity.

HEAD

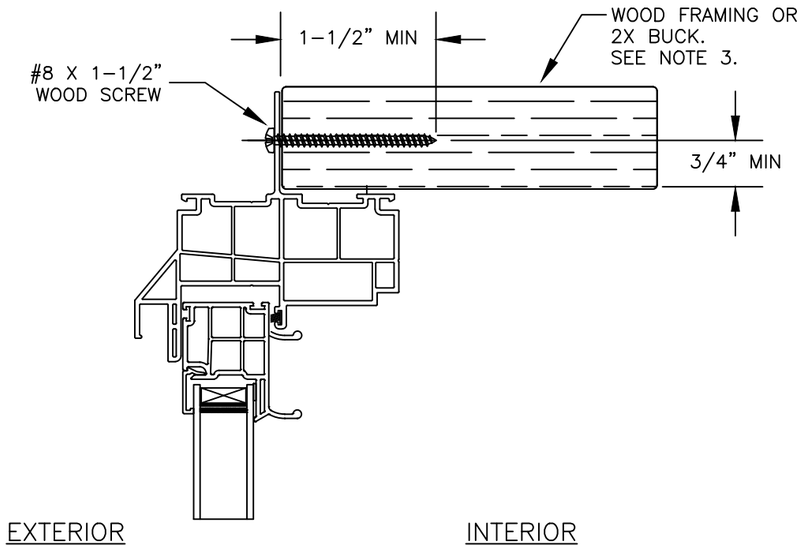

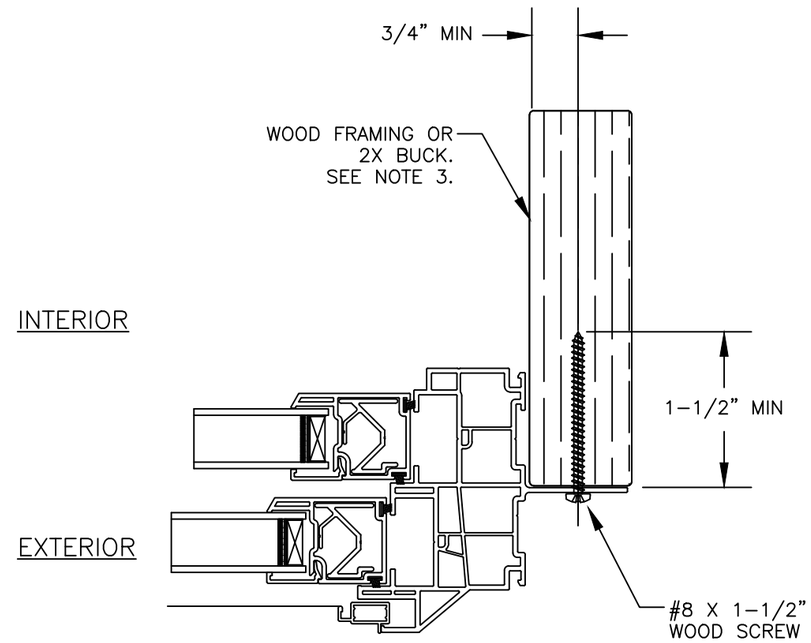

JAMB

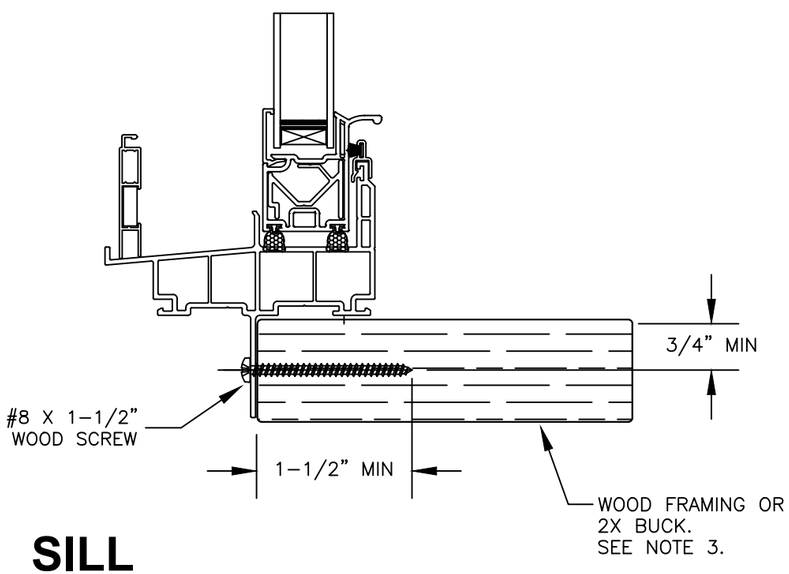

SILL

This item has been digitally signed and sealed by Michael D. Stremmel, PE on the date adjacent to the seal. Printed copies of this document are not considered signed and sealed and the signature must be verified on any electronic copies.

Michael D. Stremmel, PE
FL PE 65868
FL REG 37122
1410 Eden Road
York, PA 17402
717-916-6300

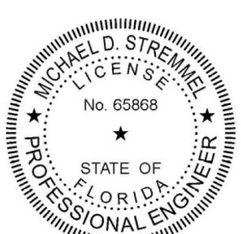

2024.09.25 06:36:35 -04'00'

1650i PVC DH Window - Non-Impact
Fin Installation to Wood

MI Windows and Doors
702 W. Market St.
Gratz, PA 17030

Drawing No.: 27250.01 - 1001
Project No.: 27250.01-107-16
Drawn By: MDS REV: 3 Date: 09/25/24

Scale: NTS

Note:
Waterproofing and interior finishes by others. Not shown for clarity.

HEAD

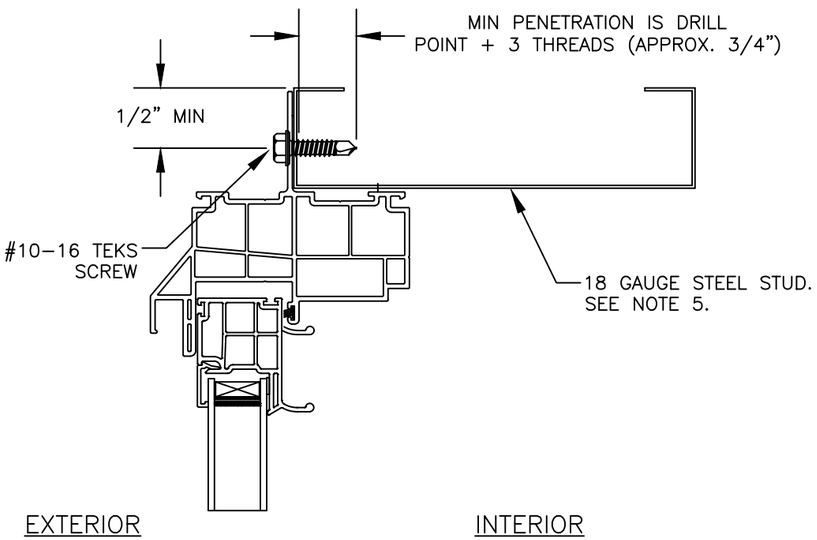

JAMB

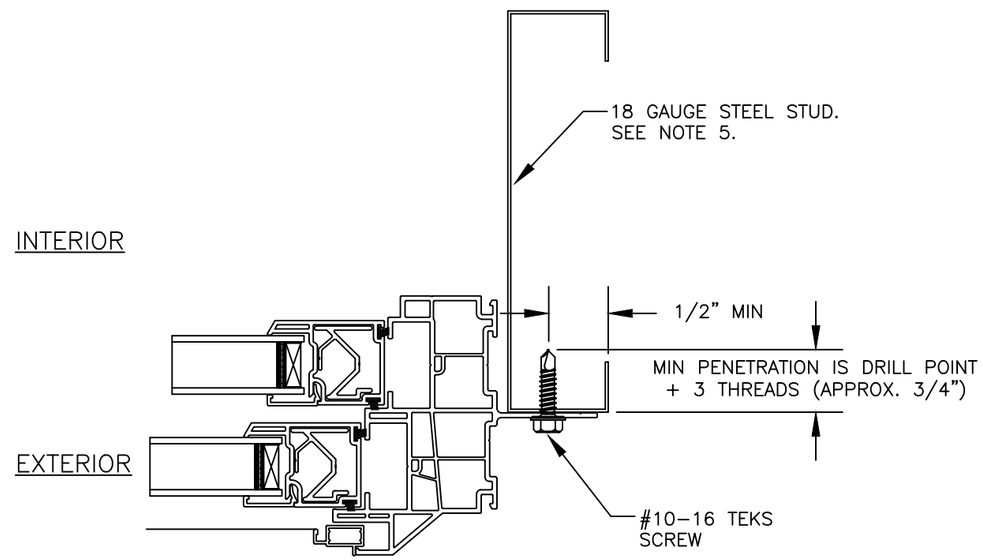

SILL

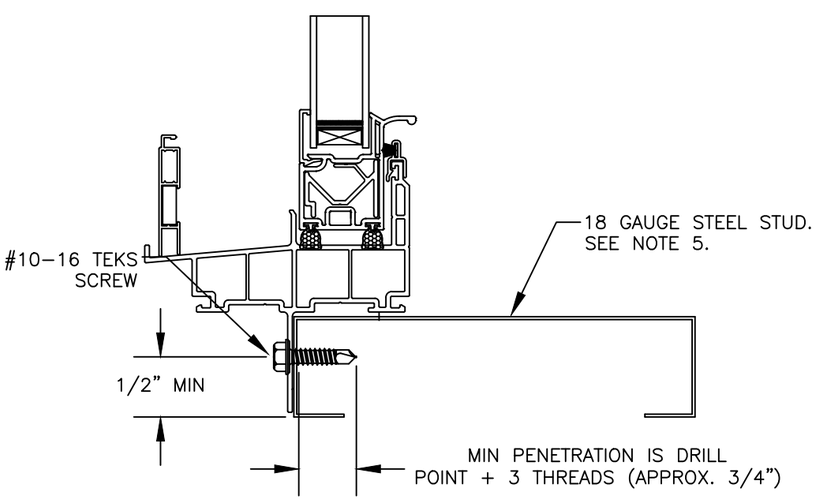

This item has been digitally signed and sealed by Michael D. Stremmel, PE on the date adjacent to the seal. Printed copies of this document are not considered signed and sealed and the signature must be verified on any electronic copies.

Michael D. Stremmel, PE
FL PE 65868
FL REG 37122
1410 Eden Road
York, PA 17402
717-916-6300

MICHAEL D. STREMMEL
LICENSE
No. 65868
STATE OF FLORIDA
PROFESSIONAL ENGINEER

2024.09.25 06:36:35 -04'00'

1650i PVC DH Window - Non-Impact
Fin Installation to Steel Stud

MI Windows and Doors
702 W. Market St.
Gratz, PA 17030

Drawing No.: 27250.01 - 1001
Project No.: 27250.01-107-16
Drawn By: MDS REV: 3 Date: 09/25/24

Scale: NTS

Note:
Waterproofing and interior finishes by others. Not shown for clarity.

HEAD

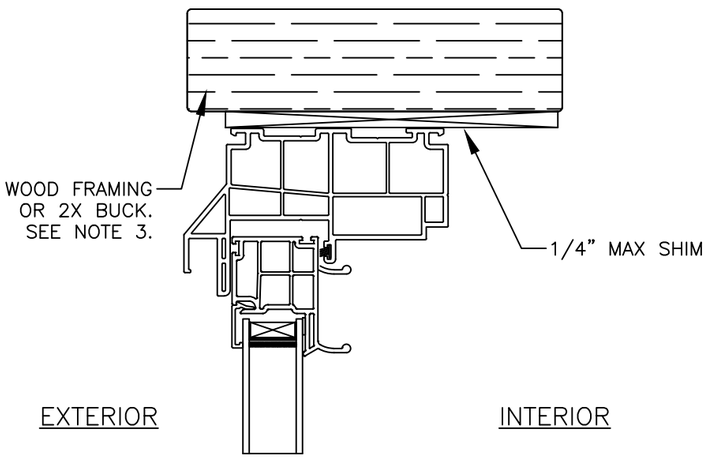

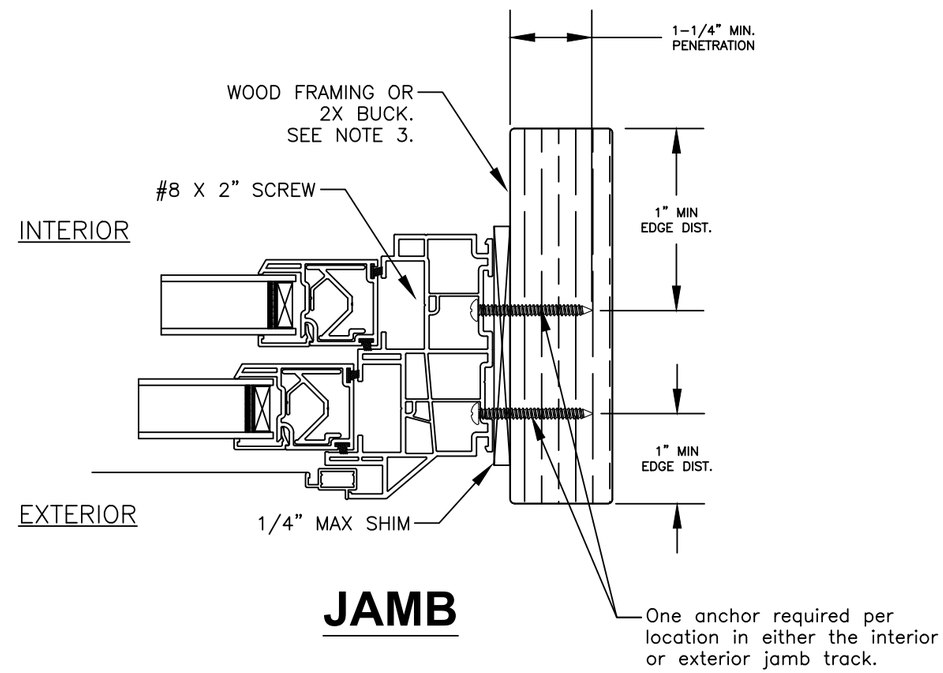

JAMB

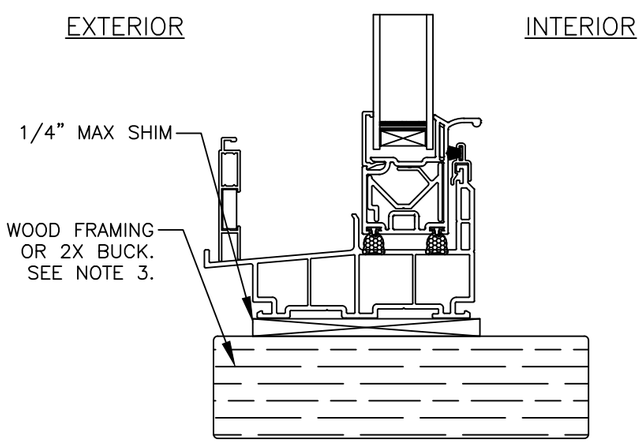

SILL

This item has been digitally signed and sealed by Michael D. Stremmel, PE on the date adjacent to the seal. Printed copies of this document are not considered signed and sealed and the signature must be verified on any electronic copies.

Michael D. Stremmel, PE
FL PE 65868
FL REG 37122
1410 Eden Road
York, PA 17402
717-916-6300

2024.09.25 06:36:35 -04'00'

1650i PVC DH Window - Non-Impact
Frame Installation to Wood

MI Windows and Doors
702 W. Market St.
Gratz, PA 17030

Drawing No.: 27250.01 - 1001
Project No.: 27250.01-107-16
Drawn By: MDS REV: 3 Date: 09/25/24

Scale: NTS

Note:
Waterproofing and interior finishes by others. Not shown for clarity.

HEAD

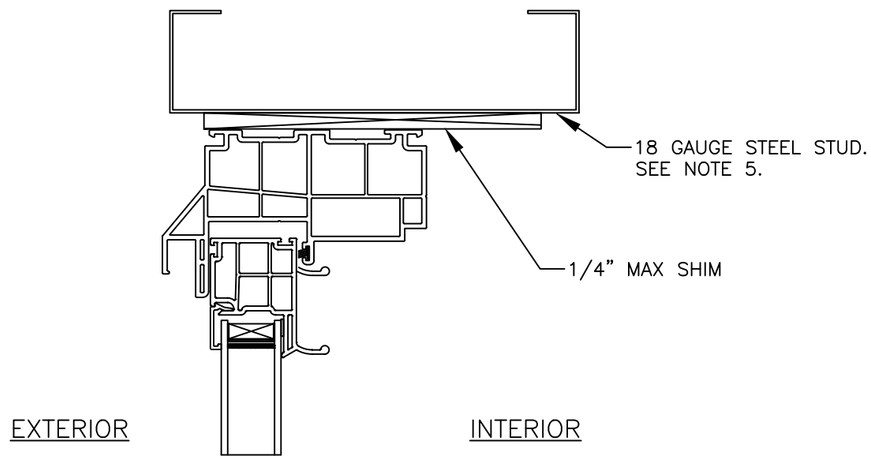

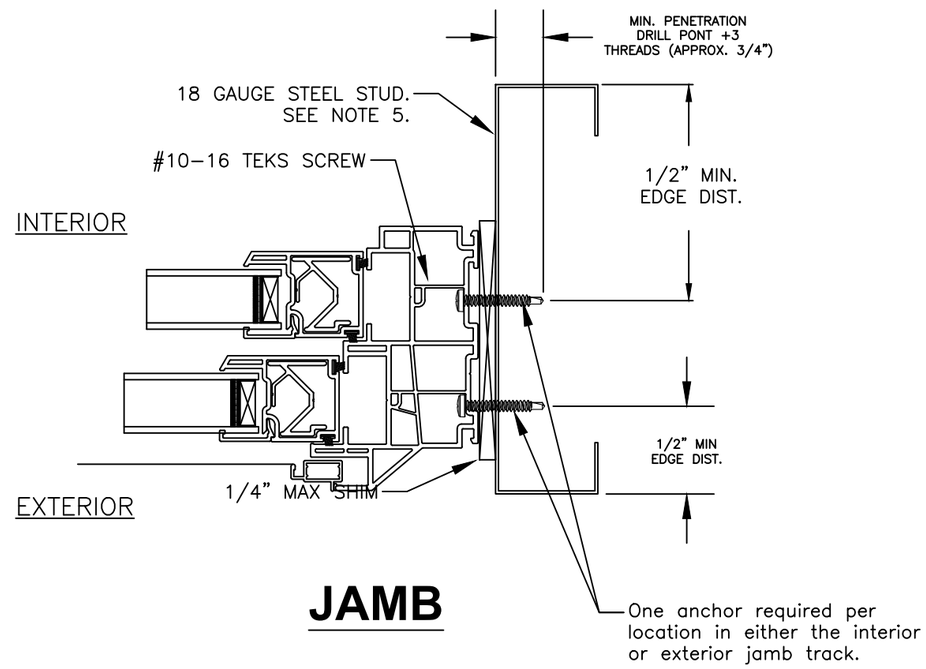

JAMB

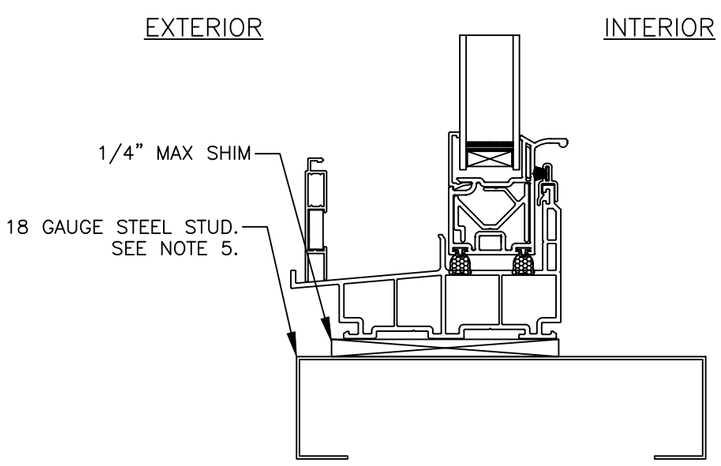

SILL

This item has been digitally signed and sealed by Michael D. Stremmel, PE on the date adjacent to the seal. Printed copies of this document are not considered signed and sealed and the signature must be verified on any electronic copies.

Michael D. Stremmel, PE
FL PE 65868
FL REG 37122
1410 Eden Road
York, PA 17402
717-916-6300

MICHAEL D. STREMMEL
LICENSE
No. 65868
STATE OF FLORIDA
PROFESSIONAL ENGINEER

2024.09.25 06:36:35 -04'00'

1650i PVC DH Window - Non-Impact
Frame Installation to Steel Stud

MI Windows and Doors
702 W. Market St.
Gratz, PA 17030

Drawing No.: 27250.01 - 1001
Project No.: 27250.01-107-16
Drawn By: MDS REV: 3 Date: 09/25/24

Scale: NTS

Note:
Waterproofing and interior finishes by others. Not shown for clarity.

HEAD

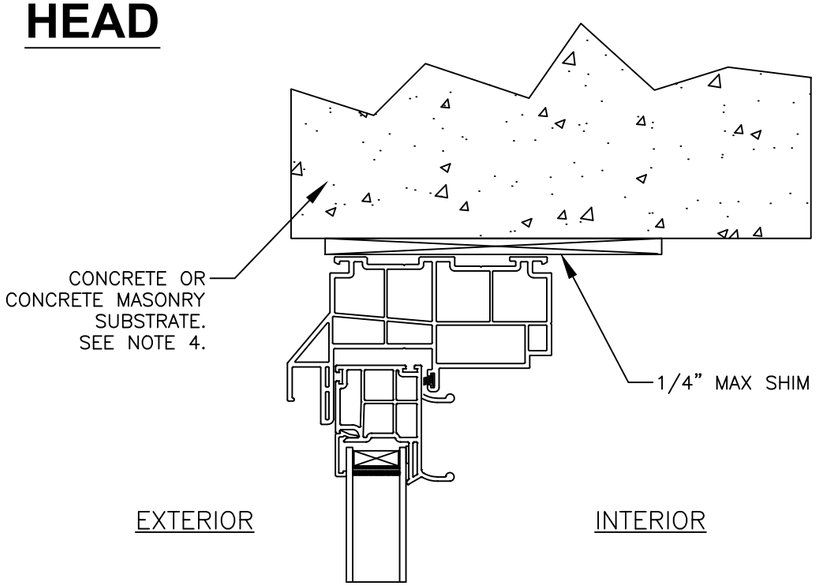

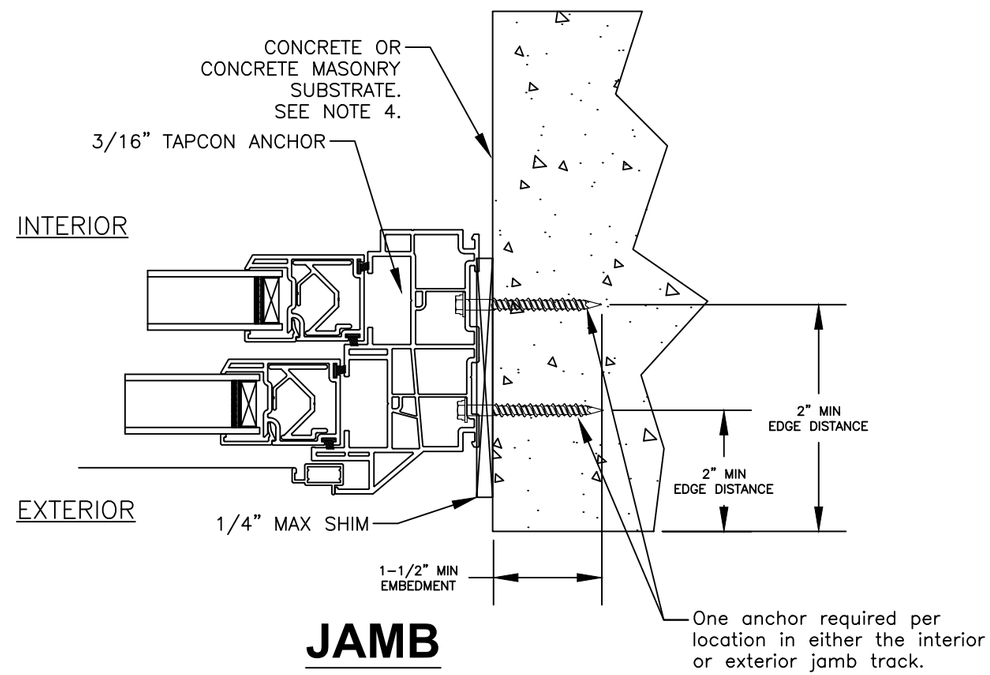

JAMB

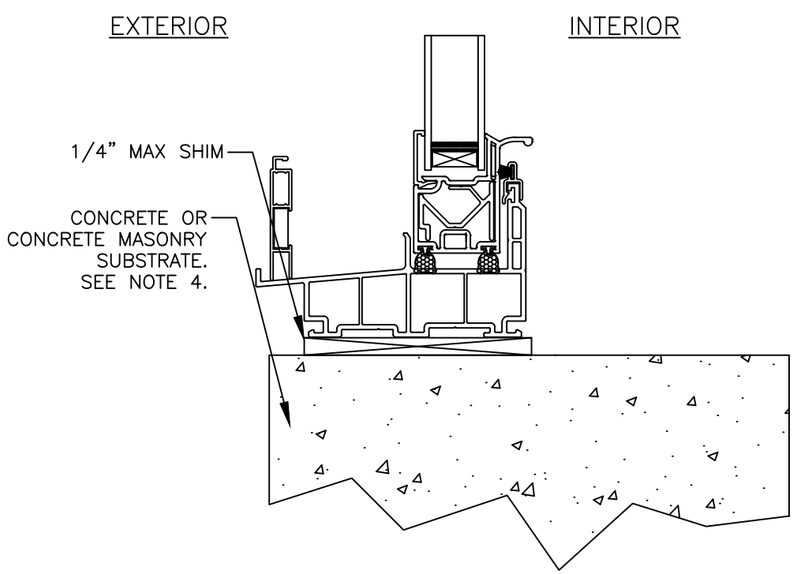

SILL

This item has been digitally signed and sealed by Michael D. Stremmel, PE on the date adjacent to the seal. Printed copies of this document are not considered signed and sealed and the signature must be verified on any electronic copies.

Michael D. Stremmel, PE
FL PE 65868
FL REG 37122
1410 Eden Road
York, PA 17402
717-916-6300

MICHAEL D. STREMMEL
LICENSE
No. 65868
STATE OF
FLORIDA
PROFESSIONAL ENGINEER

2024.09.25 06:36:35 -04'00'

1650i PVC DH Window - Non-Impact
Frame Installation to Concrete/CMU

MI Windows and Doors
702 W. Market St.
Gratz, PA 17030

Drawing No.: 27250.01 - 1001
Project No.: 27250.01-107-16
Drawn By: MDS REV: 3 Date: 09/25/24

Scale: NTS

Note:
Waterproofing and interior finishes by others. Not shown for clarity.

HEAD

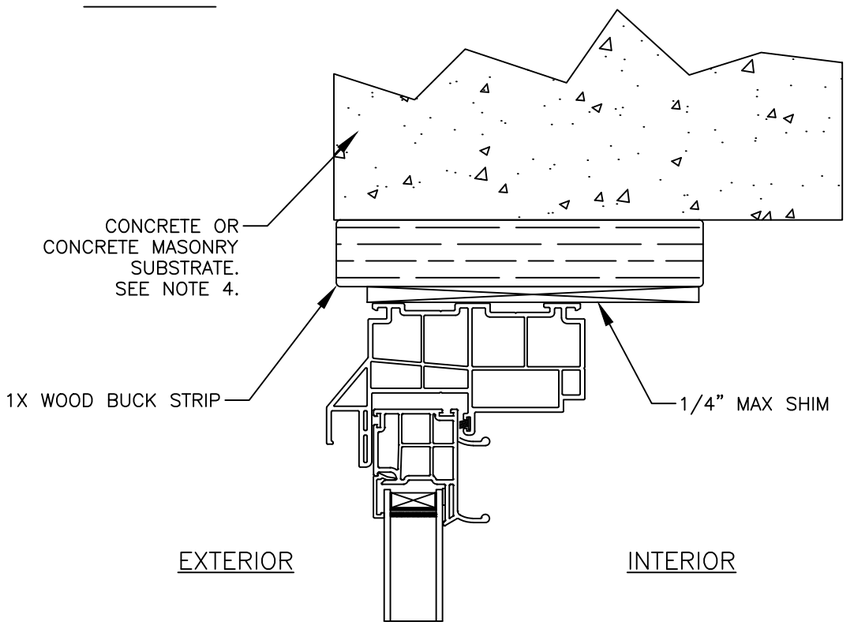

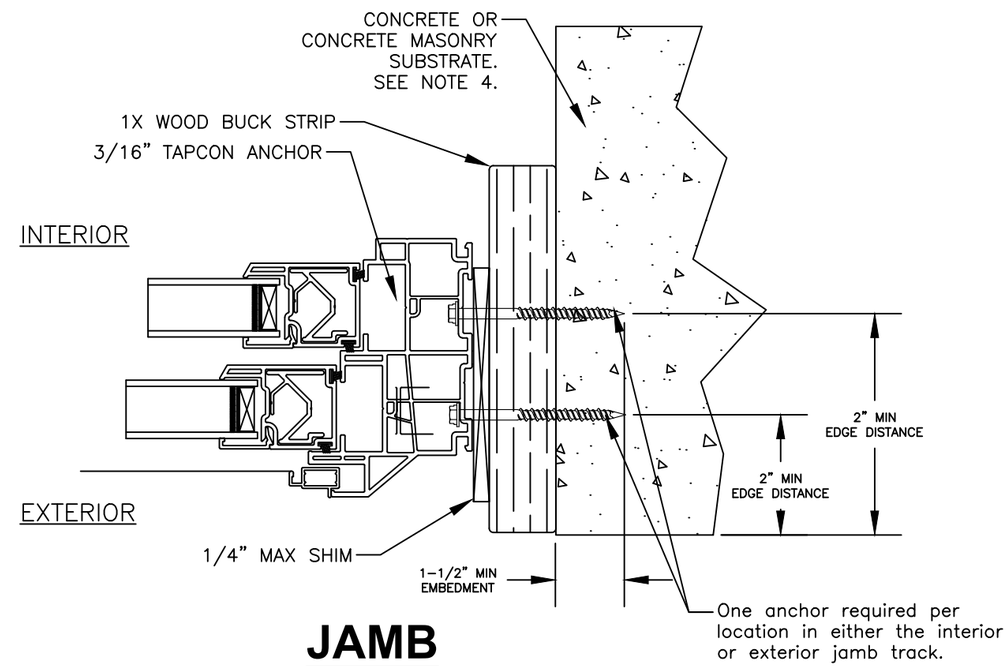

JAMB

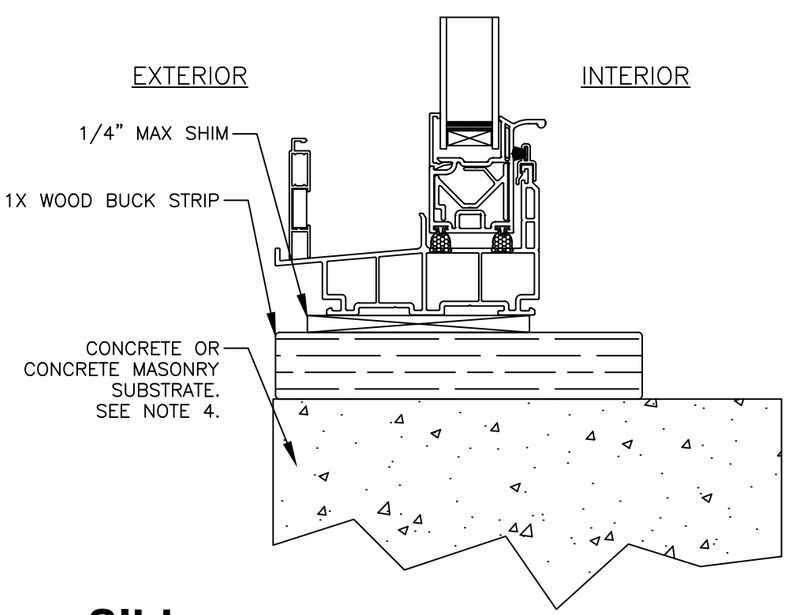

SILL

This item has been digitally signed and sealed by Michael D. Stremmel, PE on the date adjacent to the seal. Printed copies of this document are not considered signed and sealed and the signature must be verified on any electronic copies.

Michael D. Stremmel, PE
FL PE 65868
FL REG 37122
1410 Eden Road
York, PA 17402
717-916-6300

MICHAEL D. STREMMEL
LICENSE
No. 65868
STATE OF
FLORIDA
PROFESSIONAL ENGINEER

2024.09.25 06:36:35 -04'00'

1650i PVC DH Window - Non-Impact
Frame Installation to Concrete/CMU

MI Windows and Doors
702 W. Market St.
Gratz, PA 17030

Drawing No.: 27250.01 - 1001
Project No.: 27250.01-107-16
Drawn By: MDS REV: 3 Date: 09/25/24

Scale: NTS

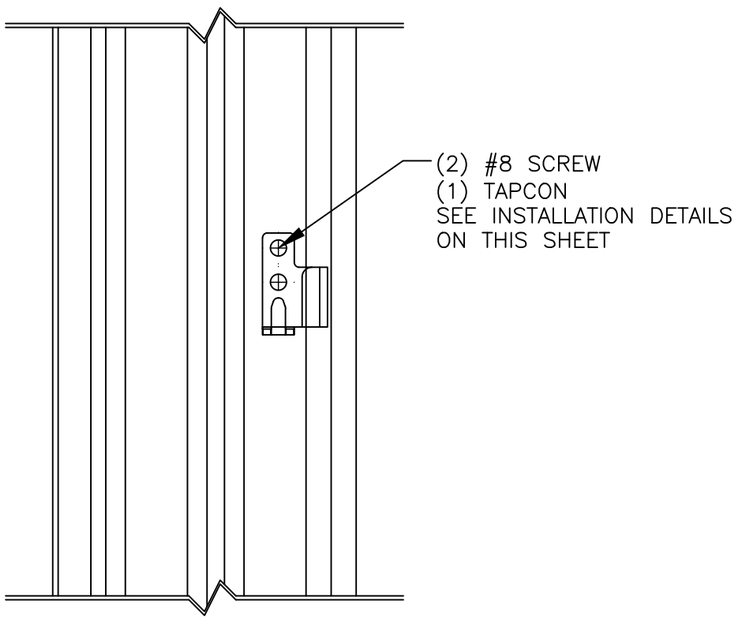

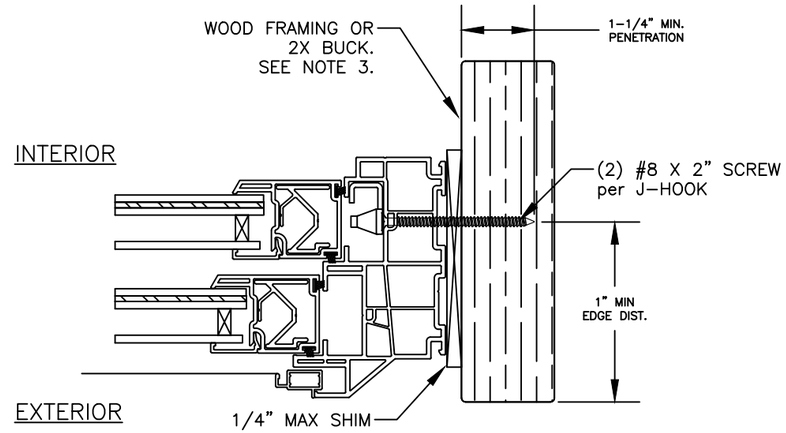

J-HOOK INSTALLATION DETAIL

WOOD FRAMING OR 2X BUCK INSTALLATION

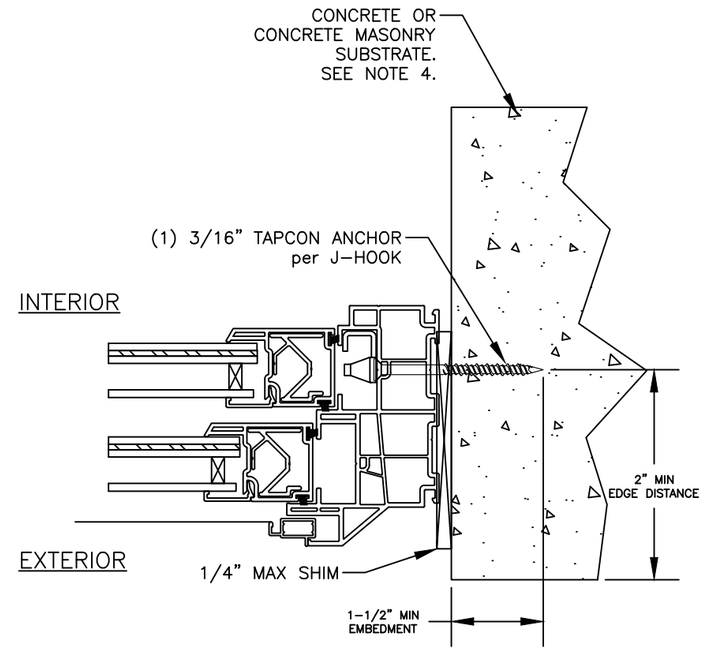

J-HOOK INSTALLATION DETAIL

CONCRETE/MASONRY WITH OR WITHOUT
1X BUCK INSTALLATION

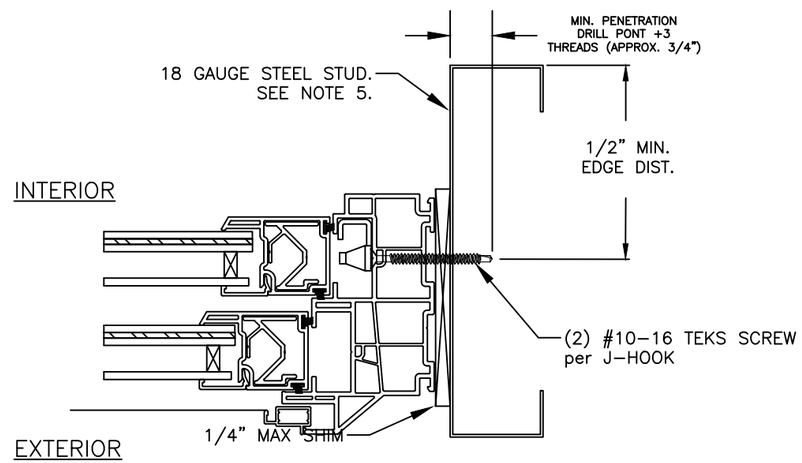

J-HOOK INSTALLATION DETAIL

METAL FRAMING INSTALLATION

This item has been digitally signed and sealed by Michael D. Stremmel, PE on the date adjacent to the seal. Printed copies of this document are not considered signed and sealed and the signature must be verified on any electronic copies.

Michael D. Stremmel, PE
FL PE 65868
FL REG 37122
1410 Eden Road
York, PA 17402
717-916-6300

MICHAEL D. STREMMEL
LICENSE
No. 65868
STATE OF FLORIDA
PROFESSIONAL ENGINEER

2024.09.25 06:36:35 -04'00'

1650i PVC DH Window - Non-Impact
J-Hook Installation Details

MI Windows and Doors
702 W. Market St.
Gratz, PA 17030

Drawing No.: 27250.01 - 1001
Project No.: 27250.01-107-16
Drawn By: MDS REV: 3 Date: 09/25/24

Scale: NTS

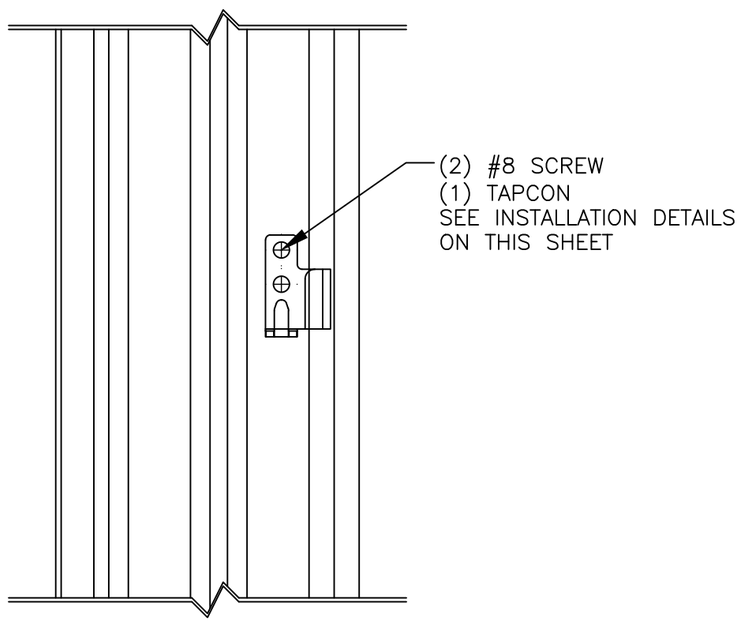

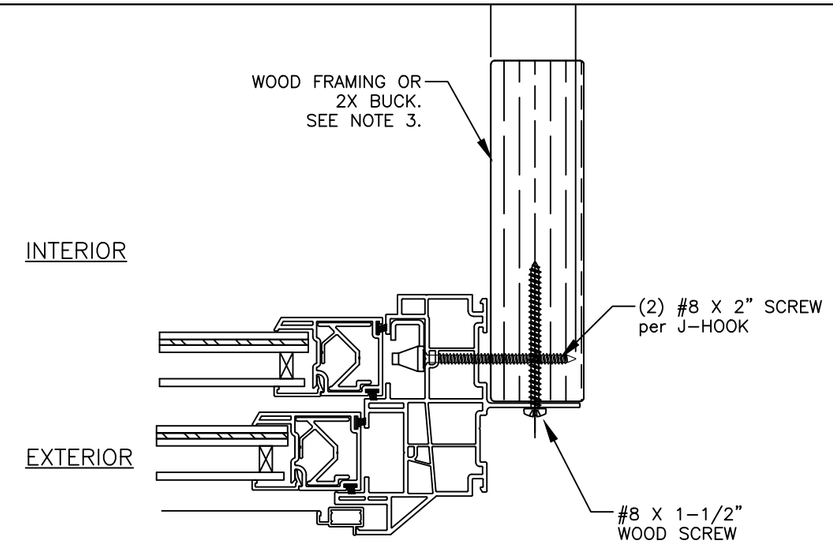

J-HOOK INSTALLATION DETAIL

WOOD FRAMING OR 2X BUCK INSTALLATION

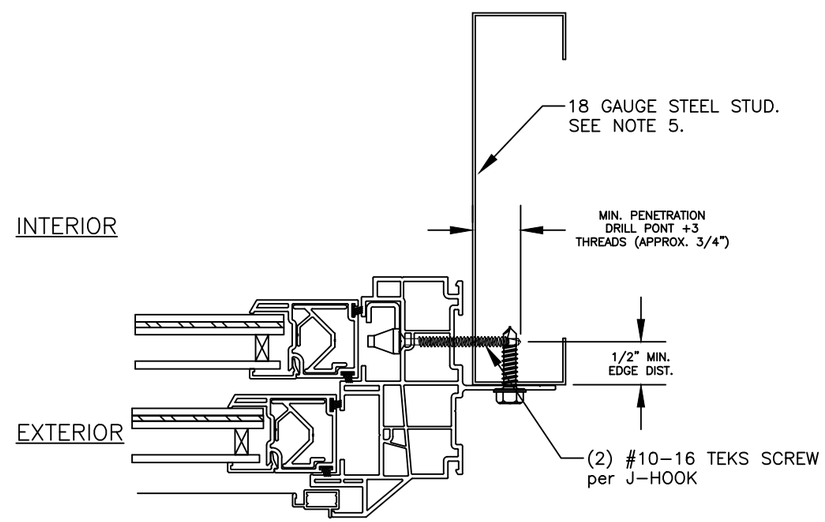

J-HOOK INSTALLATION DETAIL

METAL FRAMING INSTALLATION

This item has been digitally signed and sealed by Michael D. Stremmel, PE on the date adjacent to the seal. Printed copies of this document are not considered signed and sealed and the signature must be verified on any electronic copies.

Michael D. Stremmel, PE
FL PE 65868
FL REG 37122
1410 Eden Road
York, PA 17402
717-916-6300

MICHAEL D. STREMMEL
LICENSE
No. 65868
STATE OF FLORIDA
PROFESSIONAL ENGINEER

2024.09.25 06:36:35 -04'00'

1650i PVC DH Window - Non-Impact
J-Hook Installation Details

MI Windows and Doors
702 W. Market St.
Gratz, PA 17030

Drawing No.: 27250.01 - 1001
Project No.: 27250.01-107-16
Drawn By: MDS REV: 3 Date: 09/25/24

Scale: NTS